New

Sendix absolut, Singleturn Encoder Type 3650 (Shaft) / 3670 (Hollow shaft), SSI

Safety-Lock™ | High rotational speed | Temperature - 40° + 85° | High IP | High shaft load capacity | Shock/vibration resistant | Short-circuit proof | Reverse polarity protection

Rugged

- **Ensures long service life and reliability of the application, no wear**
  Non-contact measuring system
- **Stays sealed even when subjected to harsh everyday use. Offers security against failures in the field**
  Solid die-cast housing with up to IP 69K protection
- **Can be used for a wide temperature range without additional expense.** Wide temperature range (-40 °C ... +85 °C)
- **Increased ability to withstand vibration and installation errors. Eliminates machine downtime and repairs.**
  High shock resistance (> 500g) and vibration resistance (>30g)

Sendix® absolut RoHS Ex 2/22

Compact

- **Can be used where space is tight**
  Overall diameter of only 36 mm
- **Shaft version: can be mounted on a tight radius**
  Fixing holes on D26 mm
- **Hollow shaft version: compact encoder, ideal for large shafts**
  Blind hollow shaft up to 10 mm

Versatile

- **Enables simple installation**
  Reference point can be identified via LED (green)
- **Can be fixed on various diameters**
  Fixing holes on D 26mm and D 30mm
- **Can be used in outdoor applications with large fluctuations in temperature.**
  Resistant against humidity and condensation
- also available in **seawater resistant** version, certified acc. to salt-spray test IEC 68-2-11 => 672 hours.

Mechanical characteristics:

Max. speed:	6000 min^{-1}
Starting torque	< 0,06 Nm
Radial load capacity of shaft:	40 N
Axial load capacity of shaft:	20 N
Weight:	approx. 0,2 kg
Protection acc. to EN 60 529/ DIN 40050-9:	IP 67 / IP69k
EX approval for hazardous areas:	optional zone 2 and 22
Working temperature range:	–40 °C ... +85 °C
Materials:	Shaft: stainless steel, Flange: aluminium, Housing: die cast zinc, Cable: PUR
Shock resistance acc. to DIN-IEC 68-2-27:	5000 m/s^2, 6 ms
Vibration resistance acc. to DIN-IEC 68-2-6:	300 m/s^2, 10 ... 2000 Hz
Permanent shock resistance acc. to DIN-IEC 68-2-29	1000 m/s^2, 2 ms
Vibration (broad-band random) to DIN-IEC 68-2-64	5 ... 2500 Hz, 100 m/s^2 - rms

All-round protection thanks to Safety-Lock*plus*™ and Sensor-Protect™ technology

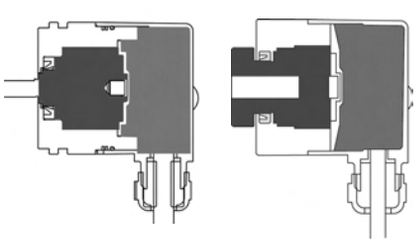

Safety-Lock*plus*™:
IP69k protection on the flange side, robust bearing assemblies with interlocking bearings, mechanically protected shaft seal

Sensor-Protect™:
Fully encapsulated electronics, separate mechanical bearing assembly

New

Rotary Measuring Technology
Magnetic measurement system

Kübler

Sendix absolut, Singleturn Encoder Type 3650 (Shaft) / 3670 (Hollow shaft), SSI

Electrical characteristics SSI Interface:

Sensor:	
Supply voltage:	5 ... 30 V DC[1)]
Current consumption (w/o output load):	typ 22 mA, max. 41 mA
Reverse polarity protection at power supply (Ub):	Yes
Measuring range:	360°
Resolution/Code:	9 Bit/Binary
Linearity (25 °C)	<1.0 %
Repeat accuracy:	<0.2 %
Data refresh rate:	typ 100 µs
Status LED:	Green, reference point at 2,1°
RoHS compliant acc. to EU guideline 2002/95/EG	
Conforms to CE requirements acc. to EN 61000-6-2, EN 61000-6-4, EN 61000-6-3 and EN 61000-4-8 (behaviour under magnetic influence).	

SSI interface	
Clock speed:	100 kHz ... 750 kHz
Output driver:	RS 485
Monoflop time typ./max.:	16 µs/20 µs
Short circuit proof outputs:	Yes[2)]
Permissible load/channel	typ. 120 Ohm (corresponding RS 485)

1) The supply voltage at the encoder input must not be less than 4.75 V (5 V - 5%)

2) Short circuit to 0V or to output, only one channel at a time, supply voltage correctly applied

Terminal assignment:

Sig.:	0V	+Ub	0 V Sens	+Ub Sens	+T	-T	+D	-D
Col.:	WH	BN	BU	RD	GN	YE	GY	PK

Dimensions shaft version:
ø 36 mm, Synchro flange

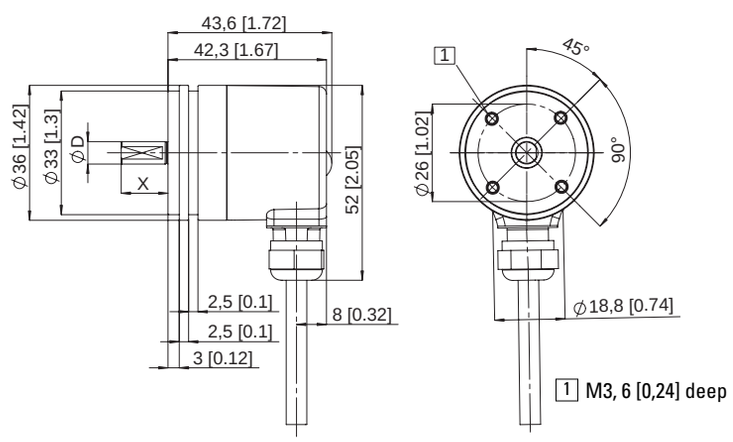

Order code shaft version:

8 . 3 6 5 0 . X X X X . X X X X

10 by 10

Type

Flange
2 = Synchro flange

Shaft (ø x L)
3 = ø 6 mm x 12,5 mm
5 = ø 6,35 (1/4") mm x 12,5 mm

Output circuit / Power supply
2 = SSI/5 ... 30 V DC

Option 1
1 = IP67
2 = IP69k

Option 2
1 = Count direction cw*
2 = Count direction ccw*

Code type and division
B9 = 9 Bit binary

Type of connection
2 = cable radial (1 m PUR)

*cw = increasing code values when shaft turning clockwise (cw). Top view on shaft
- seawater resistant version on request

*Preferred types are indicated in **bold***

Accessories:
Cables and connectors, also pre-assembled, can be found in the chapter Connection Technology
Mounting attachments and couplings can be found in the chapter Accessories

New

Sendix absolut, Singleturn Encoder Type 3650 (Shaft) / 3670 (Hollow shaft), SSI

Diemensions hollow shaft version:

ø 36 mm, Flange with long torque stop

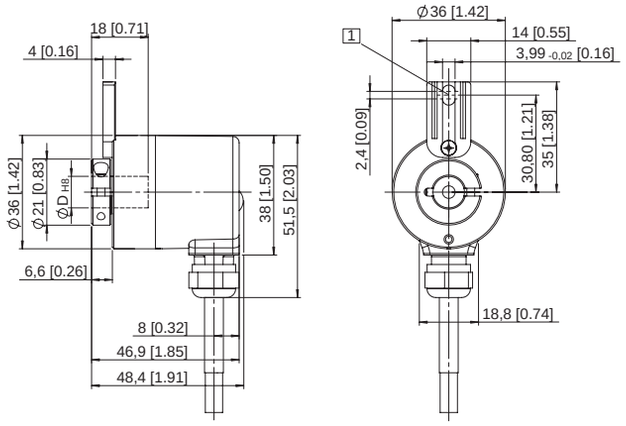

ø 36 mm, Stator coupling

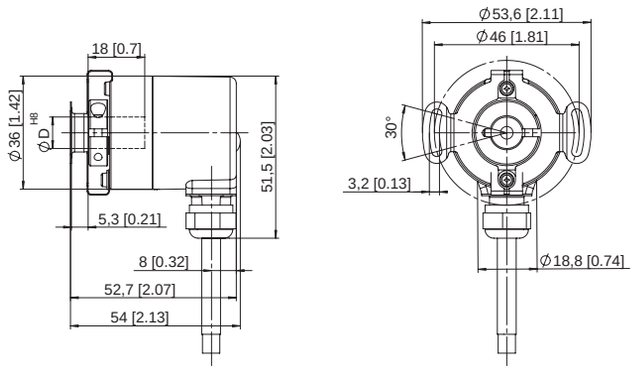

1 Torque stop slot,
Recommendation: cyl. pin. acc. DIN 7 ø4

Order code hollow shaft version:

8.3670.XXXX.XXXX

10 by 10

Type

Flange
- 2 = Flange with long torque stop
- **5 = Flange with stator coupling**

Hollow shaft
- **2 = ø 6 mm**
- 3 = ø 6,35 (1/4“)
- 4 = ø 8 mm
- 6 = ø 10 mm

Output circuit / Power supply
- **2 = SSI/5 ... 30 V DC**

Option 1
- **1 = IP 67**
- 2 = IP69k

Option 2
- **1 = Count direction cw***
- 2 = Count direction ccw*

Code type and division
- **B9 = 9 Bit binary**

Type of connection
- **2 = Cable radial (1 m PUR)**

*cw = increasing code values when shaft turning clockwise (cw). Top view on shaft
- seawater resistant version on request

Preferred types are indicated in ***bold***

Accessories:

Cables and connectors, also pre-assembled, can be found in the chapter Connection Technology
Mounting attachments and couplings can be found in the chapter Accessories